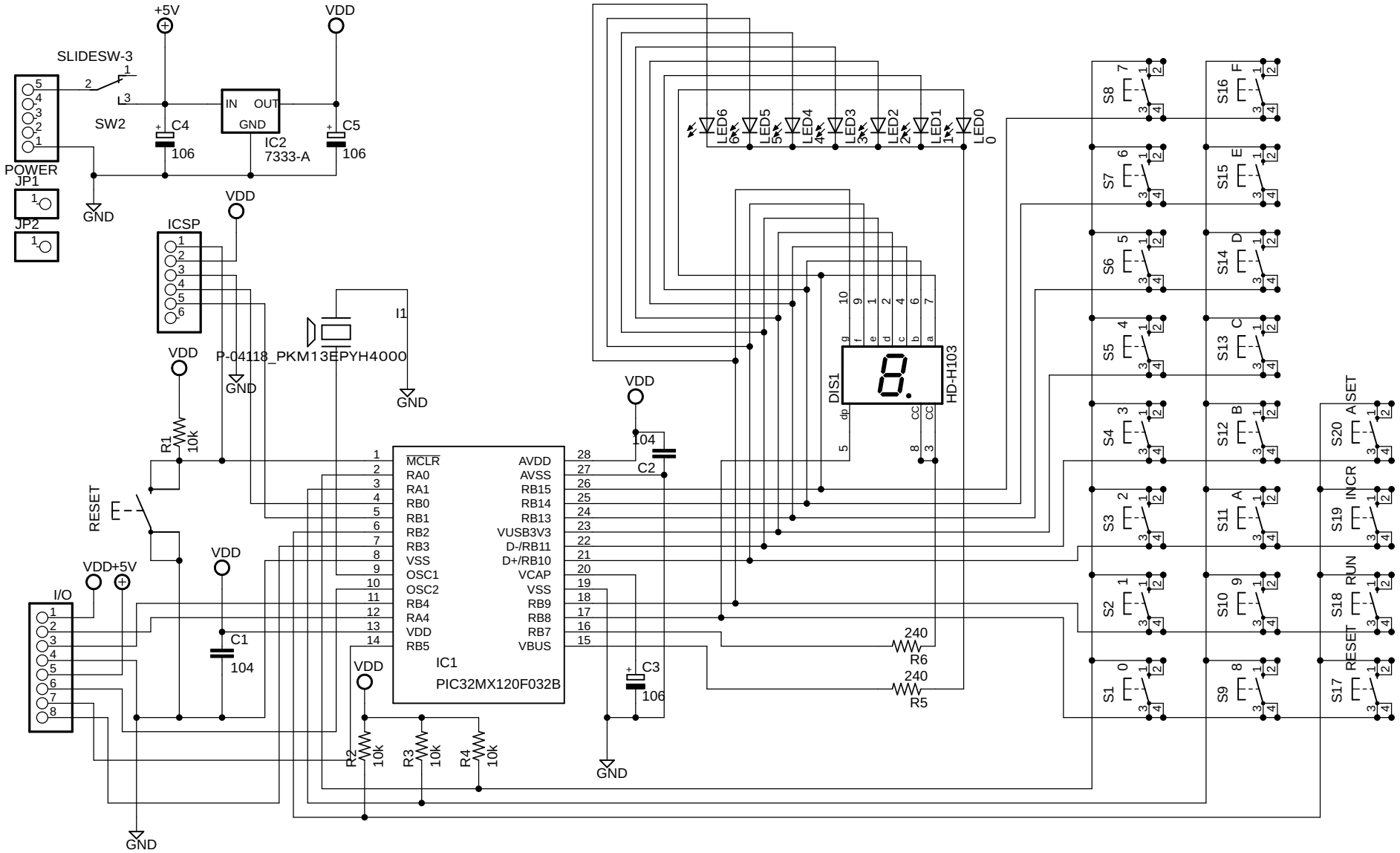
+5V
VDD
SLIDESW-3
SW2
POWER
JP1
JP2
GND
C4
106
IN
OUT
GND
IC2
7333-A
C5
106
ICSP
I1
P-04118_PKM13EPYH4000
R1
10k
RESET
VDD+5V
I/O
C1
104
MCLR
RA0
RA1
RB0
RB1
RB2
RB3
VSS
OSC1
OSC2
RB4
RA4
VDD
RB5
AVDD
AVSS
RB15
RB14
RB13
VUSB3V3
D-/RB11
D+/RB10
VCAP
VSS
RB9
RB8
RB7
VBUS
IC1
PIC32MX120F032B
C2
104
C3
106
R2
10k
R3
10k
R4
10k
LED6
LED5
LED4
LED3
LED2
LED1
LED0
DIS1
HD-H103
R6
240
R5
240
S1
S2
S3
S4
S5
S6
S7
S8
S9
S10
S11
S12
S13
S14
S15
S16
S17
S18
S19
S20
RESET
RUN
INCR
ASET