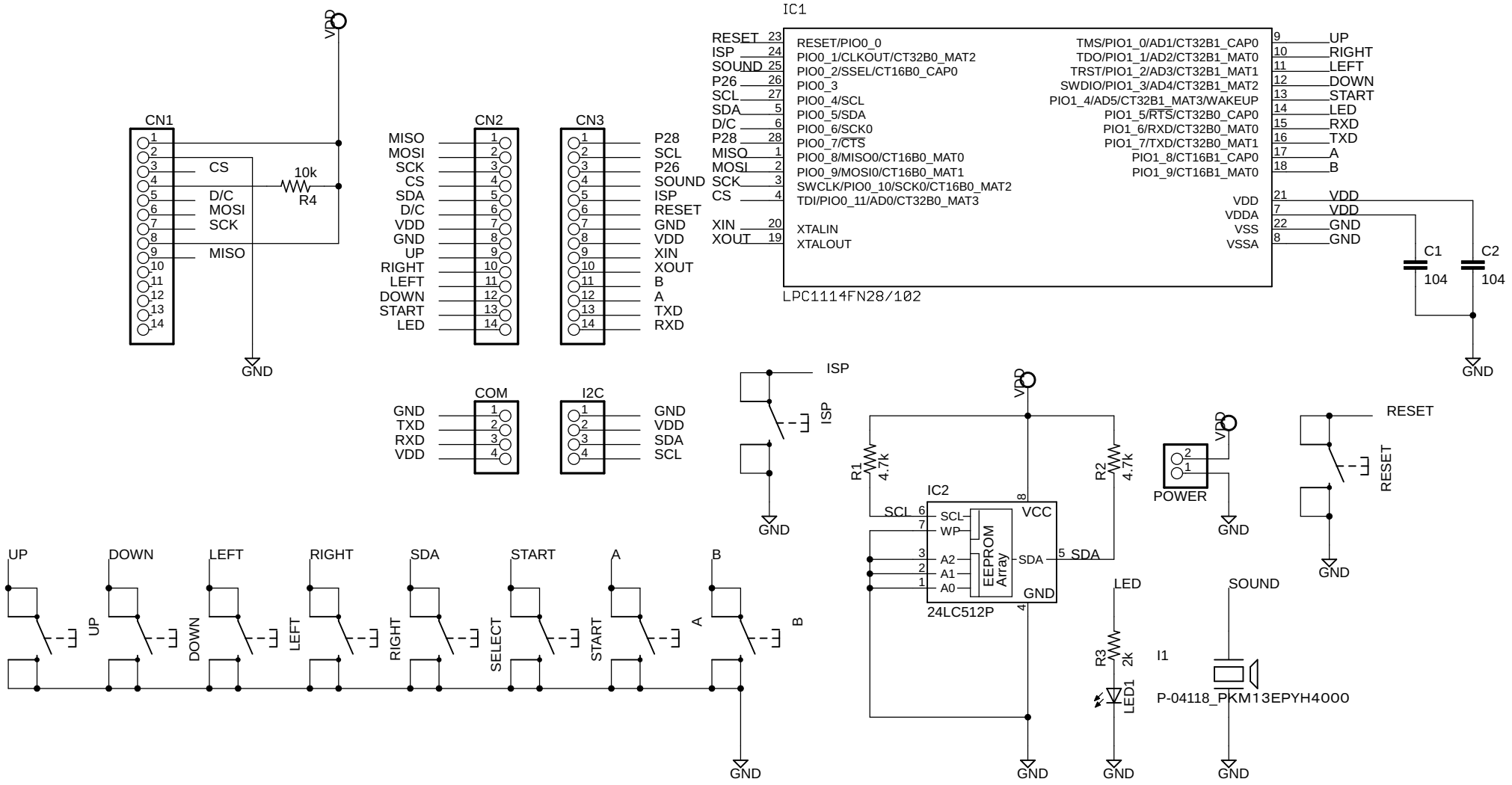
IC1
LPC1114FN28/102
RESET/PIO0_0
PIO0_1/CLKOUT/CT32B0_MAT2
PIO0_2/SSEL/CT16B0_CAP0
PIO0_3
PIO0_4/SCL
PIO0_5/SDA
PIO0_6/SCK0
PIO0_7/CTS
PIO0_8/MISO0/CT16B0_MAT0
PIO0_9/MOSI0/CT16B0_MAT1
SWCLK/PIO0_10/SCK0/CT16B0_MAT2
TDI/PIO0_11/AD0/CT32B0_MAT3
XTALIN
XTALOUT
TMS/PIO1_0/AD1/CT32B1_CAP0
TDO/PIO1_1/AD2/CT32B1_MAT0
TRST/PIO1_2/AD3/CT32B1_MAT1
SWDIO/PIO1_3/AD4/CT32B1_MAT2
PIO1_4/AD5/CT32B1_MAT3/WAKEUP
PIO1_5/RTS/CT32B0_CAP0
PIO1_6/RXD/CT32B0_MAT0
PIO1_7/TXD/CT32B0_MAT1
PIO1_8/CT16B1_CAP0
PIO1_9/CT16B1_MAT0
VDD
VDDA
VSS
VSSA
RESET 23
ISP 24
SOUND 25
P26 26
SCL 27
SDA 5
D/C 6
P28 28
MISO 1
MOSI 2
SCK 3
CS 4
XIN 20
XOUT 19
9 UP
10 RIGHT
11 LEFT
12 DOWN
13 START
14 LED
15 RXD
16 TXD
17 A
18 B
21 VDD
7 VDD
22 GND
8 GND
C1 104
C2 104
GND
VDD
CN1
CS
D/C
MOSI
SCK
MISO
10k
R4
CN2
MISO
MOSI
SCK
CS
SDA
D/C
VDD
GND
UP
RIGHT
LEFT
DOWN
START
LED
CN3
P28
SCL
P26
SOUND
ISP
RESET
GND
VDD
XIN
XOUT
B
A
TXD
RXD
COM
GND
TXD
RXD
VDD
I2C
GND
VDD
SDA
SCL
ISP
R1 4.7k
R2 4.7k
IC2
SCL
WP
A2
A1
A0
VCC
SDA
GND
EEPROM Array
24LC512P
POWER
RESET
LED
R3 2k
LED1
SOUND
I1
P-04118_PKM13EPYH4000
UP
DOWN
LEFT
RIGHT
SDA
START
A
B
SELECT