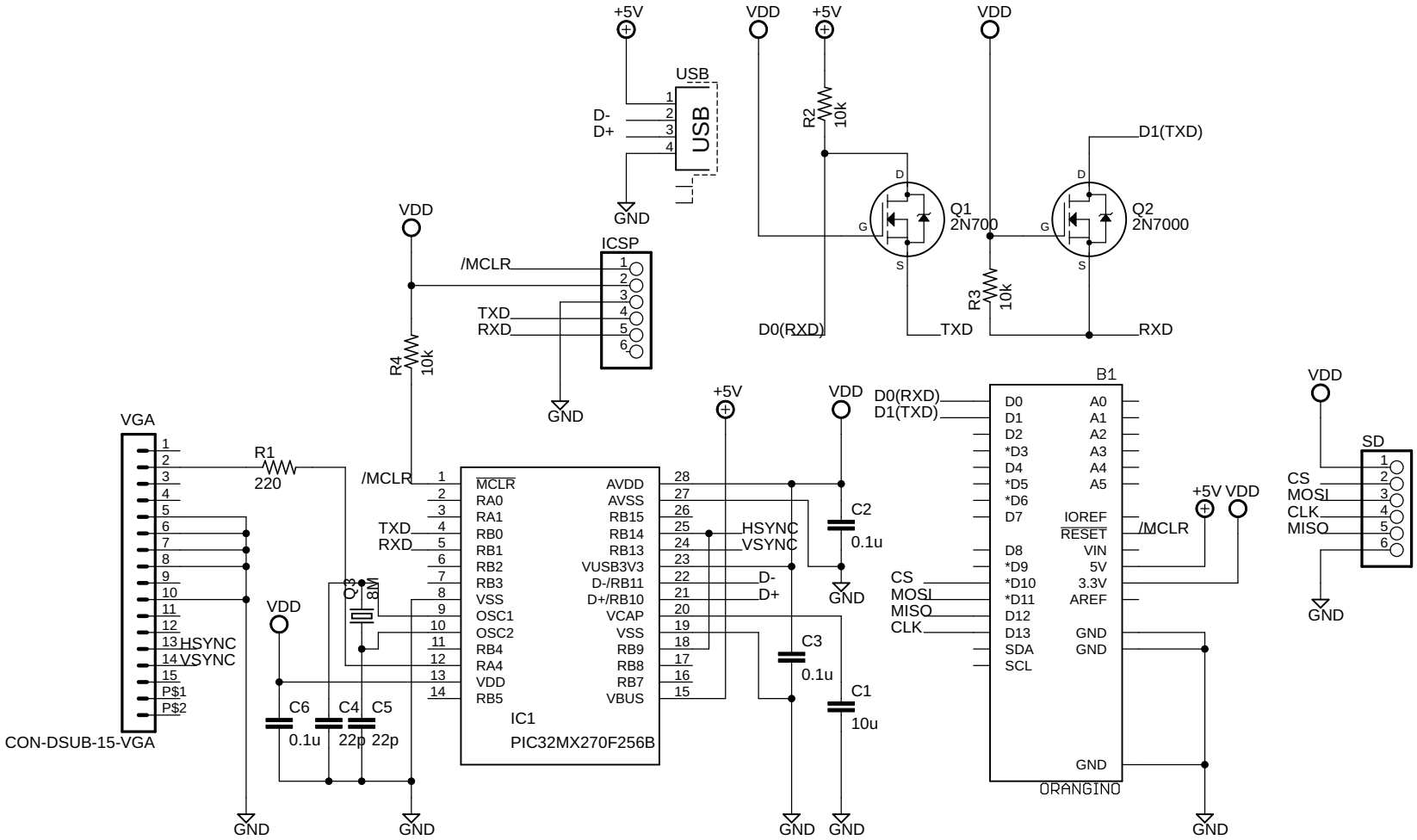
+5V
USB
D-
D+
GND
VDD
+5V
R2
10k
VDD
Q1
2N700
Q2
2N7000
D1(TXD)
D0(RXD)
TXD
R3
10k
RXD
ICSP
/MCLR
TXD
RXD
R4
10k
VGA
R1
220
HSYNC
VSYNC
P$1
P$2
CON-DSUB-15-VGA
C6
0.1u
C4
22p
C5
22p
8M
IC1
PIC32MX270F256B
MCLR
RA0
RA1
RB0
RB1
RB2
RB3
VSS
OSC1
OSC2
RB4
RA4
VDD
RB5
AVDD
AVSS
RB15
RB14
RB13
VUSB3V3
D-/RB11
D+/RB10
VCAP
VSS
RB9
RB8
RB7
VBUS
C2
0.1u
C3
0.1u
C1
10u
B1
D0
D1
D2
*D3
D4
*D5
*D6
D7
D8
*D9
*D10
*D11
D12
D13
SDA
SCL
A0
A1
A2
A3
A4
A5
IOREF
RESET
VIN
5V
3.3V
AREF
ORANGINO
SD
CS
MOSI
CLK
MISO