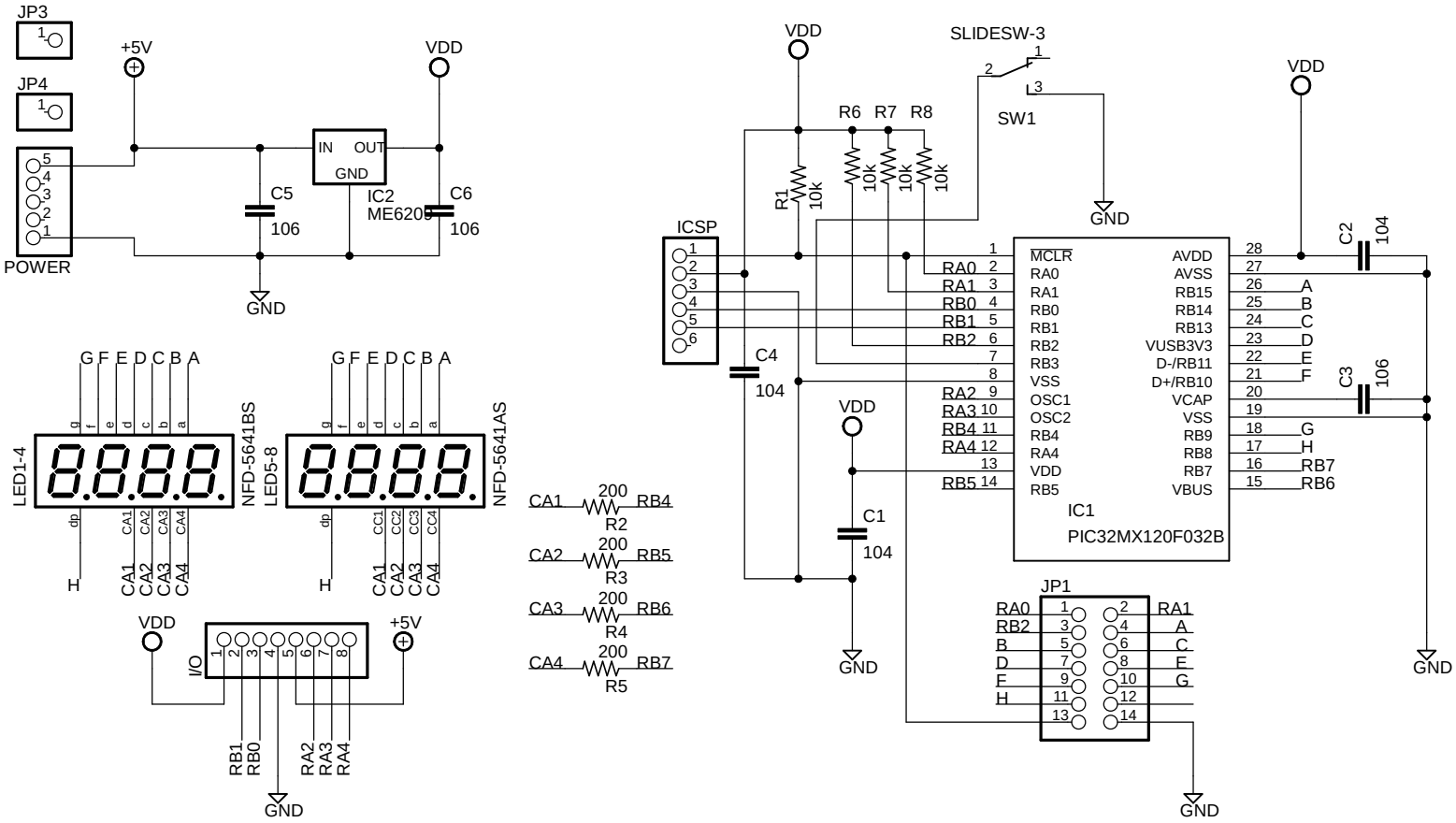
JP3
JP4
+5V
VDD
IN
OUT
GND
IC2
ME6205
C5
106
C6
106
POWER
GND
G F E D C B A
LED1-4
NFD-5641BS
LED5-8
NFD-5641AS
dp
CA1 CA2 CA3 CA4
CC1 CC2 CC3 CC4
H
I/O
RB1
RB0
RA2
RA3
RA4
CA1 200 R2 RB4
CA2 200 R3 RB5
CA3 200 R4 RB6
CA4 200 R5 RB7
R1 10k
R6 10k
R7 10k
R8 10k
SLIDESW-3
SW1
ICSP
C4
104
C1
104
MCLR
RA0
RA1
RB0
RB1
RB2
RB3
VSS
OSC1
OSC2
RB4
RA4
VDD
RB5
AVDD
AVSS
RB15
RB14
RB13
VUSB3V3
D-/RB11
D+/RB10
VCAP
VSS
RB9
RB8
RB7
VBUS
IC1
PIC32MX120F032B
C2
104
C3
106
JP1
RA0
RB2
B
D
F
H
RA1
A
C
E
G